UNIVERSITY OF CAMBRIDGE INTERNATIONAL EXAMINATIONS
International General Certificate of Secondary Education

CANDIDATE NAME	

CENTRE NUMBER						CANDIDATE NUMBER				

7426205492

DESIGN AND TECHNOLOGY **0445/03**

Paper 3 Resistant Materials **May/June 2009**

1 hour

Candidates answer on the Question Paper.

No Additional Materials are required.

To be taken together with Paper 1 in one session of 2 hours 15 minutes.

READ THESE INSTRUCTIONS FIRST

Write your Centre number, candidate number and name on all the work you hand in.
Write in blue or black pen.
You may use a soft pencil for any diagrams, graphs or rough working.
Do not use staples, paper clips, highlighters, glue or correction fluid.
DO **NOT** WRITE IN ANY BARCODES.

Section A
Answer **all** questions in this section.
Section B
Answer **one** question in this section.

You may use a calculator.

The total of the marks for this paper is 50.
The number of marks is given in brackets [ ] at the end of each question or part question.

For Examiner's Use	
Section A	
Section B	
Total	

This document consists of **17** printed pages and **3** blank pages.

For Examiner's Use

Section A

Answer **all** questions in this section.

1 Fig. 1 shows an engineer's vice.

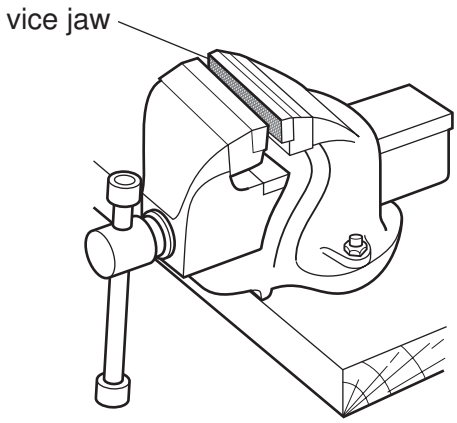

Fig. 1

(a) Give **one** reason why it is sometimes necessary to cover the vice jaws with soft metal vice jaw covers.

..... [1]

(b) Name a soft metal suitable for the vice jaw covers.

..... [1]

2 Fig. 2 shows the end of a length of wood.

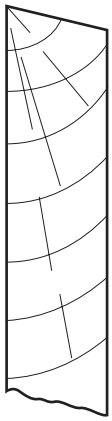

Fig. 2

Add a sketch of a try square to Fig. 2 to show how the try square would be used to test for squareness. [2]

3 Explain why the shaped acrylic sheet shown below would have been heated in an oven rather than by using a line bender or strip heater.

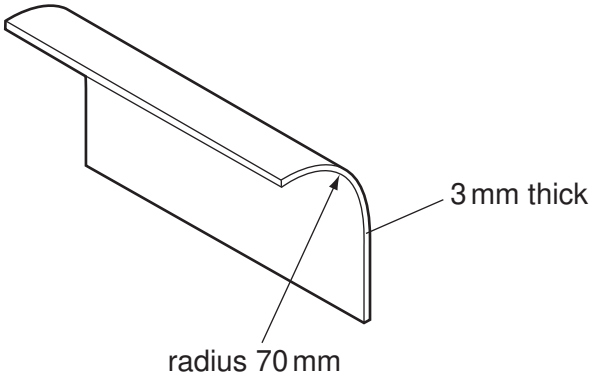

.....

.....

..... [2]

4 Complete Fig. 3 by showing how the rail could be screwed to the table top. The heads of the screws must not be seen.

Fig. 3

[2]

5 Mild steel rivets are malleable.

Explain what is meant by the term 'malleable'.

.....

.....

..... [2]

6 Fig. 4 shows a small wheel. The wheel could be made from a single piece of wood, metal or plastic.

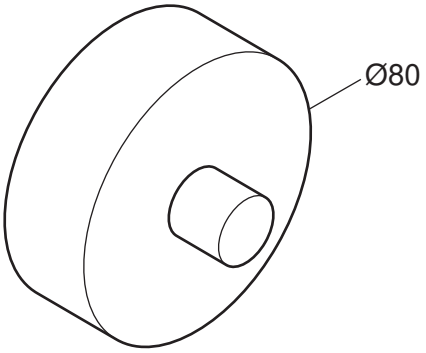

Fig. 4

Name a suitable method of manufacture for the wheel when made from:

(a) wood;

..... [1]

(b) metal;

..... [1]

(c) plastic.

..... [1]

7 Fig. 5 shows a corner bracket made from solid wood. During fixing, it snapped at **A**.

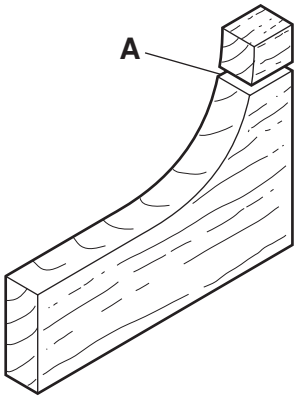

Fig. 5

(a) Give **one** reason why the corner bracket snapped at **A** during fixing.

..... [1]

(b) State how the corner bracket could be made and fixed without snapping.

..... [1]

For Examiner's Use

8 Complete Fig. 6 to show a housing joint.

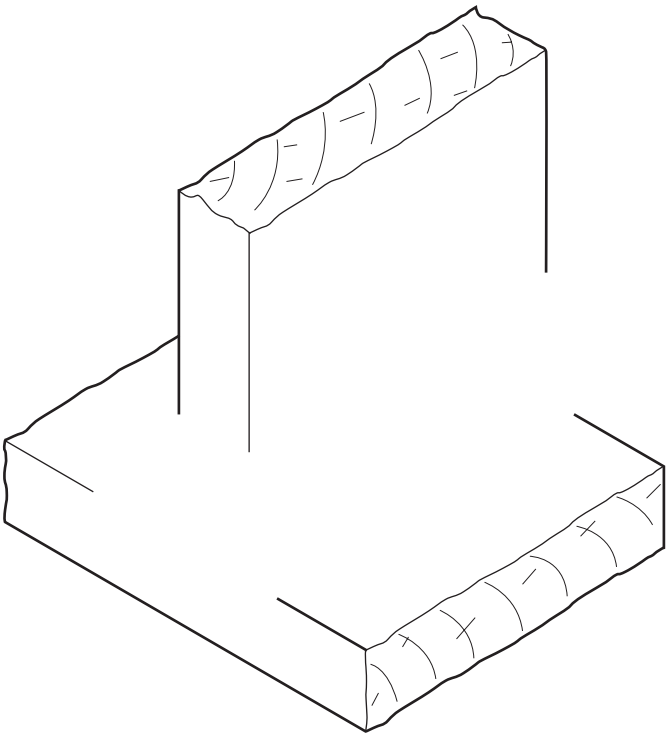

Fig. 6

[3]

9 Fig. 7 shows two different woodscrews.

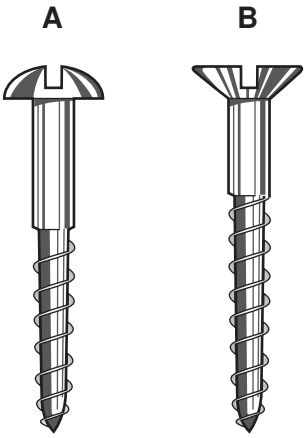

Fig. 7

(a) Name the two types of woodscrew.

Woodscrew **A** ..... [1]

Woodscrew **B** ..... [1]

(b) Show clearly on Fig. 7 how the length of **each** screw is measured. [2]

For Examiner's Use

10 Fig. 8 shows a letter rack made from acrylic.

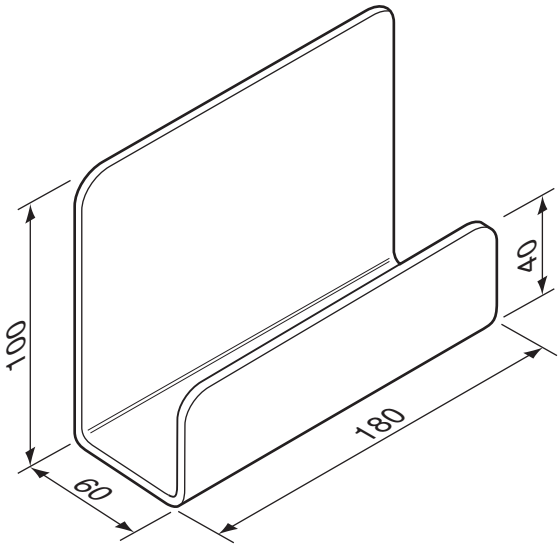

Fig. 8

(a) Mark out the positions for the bend lines on the development (net) below.

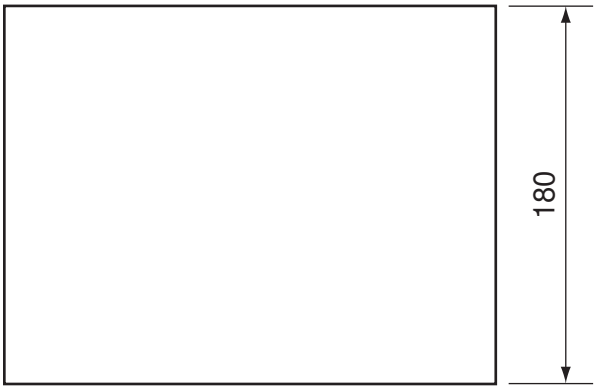

[2]

(b) Give **one** reason why the bend lines would be marked on the acrylic using a felt marker rather than a scriber.

..... [1]

Section B

Answer **one** question from this section.

11 Fig. 9 shows an incomplete design for a post box used by young children in school. The lid for the post box has been removed.

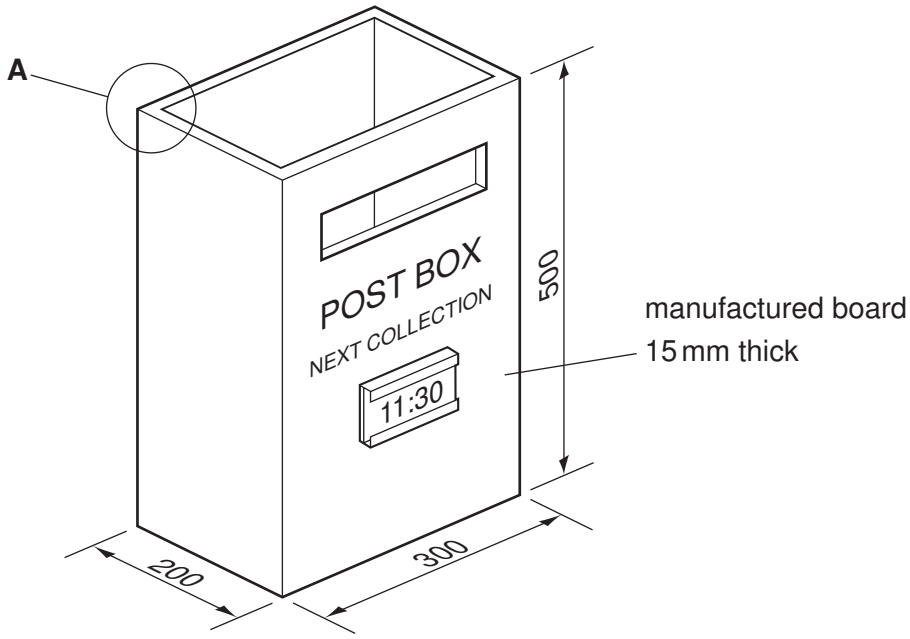

Fig. 9

(a) (i) Name a suitable manufactured board for the post box.

..... [1]

(ii) Give **two** advantages of using a manufactured board rather than a solid wood for the post box.

1 ..... [1]

2 ..... [1]

(b) Use sketches and notes to show how the side and back could be joined at **A** using KD (knock-down) fittings.

[4]

(c) Fig. 10 shows details of the slot to be cut out of the front of the post box.

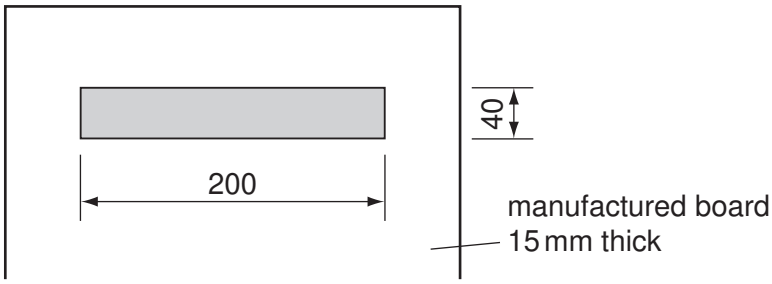

Fig. 10

(i) Name **two** tools used to mark out the shape of the slot.

1 ..... [1]

2 ..... [1]

(ii) Use sketches and notes to show how the slot could be cut out and the edges smoothed. Name the tools used.

[6]

(d) The post box will be painted.

(i) Give **one** advantage of spray painting rather than brush painting.

..... [1]

(ii) State **one** safety precaution you would take when spray painting.

..... [1]

(e) Use sketches and notes to design a lid for the post box.
Include details of any fittings you might use.

[4]

(f) Fig. 11 shows details of the holder for the 'next collection' time card, positioned on the front of the post box.

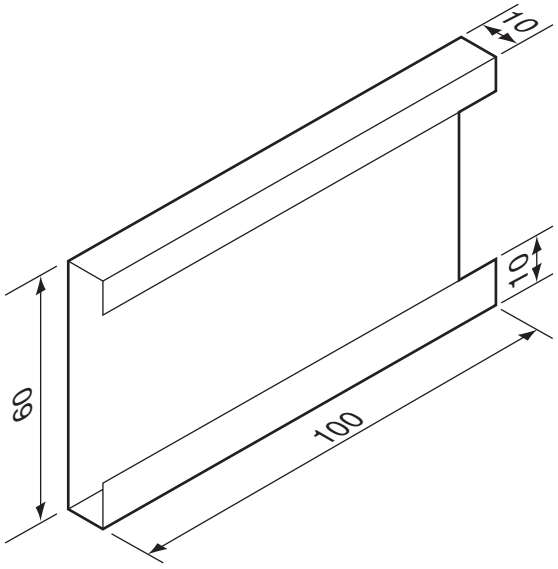

Fig. 11

Use sketches and notes to show how the holder could be formed from 1 mm thick mild steel sheet.

[4]

12 Fig. 12 shows a balancing toy made from mild steel. The stand on which the toy will be is not shown.

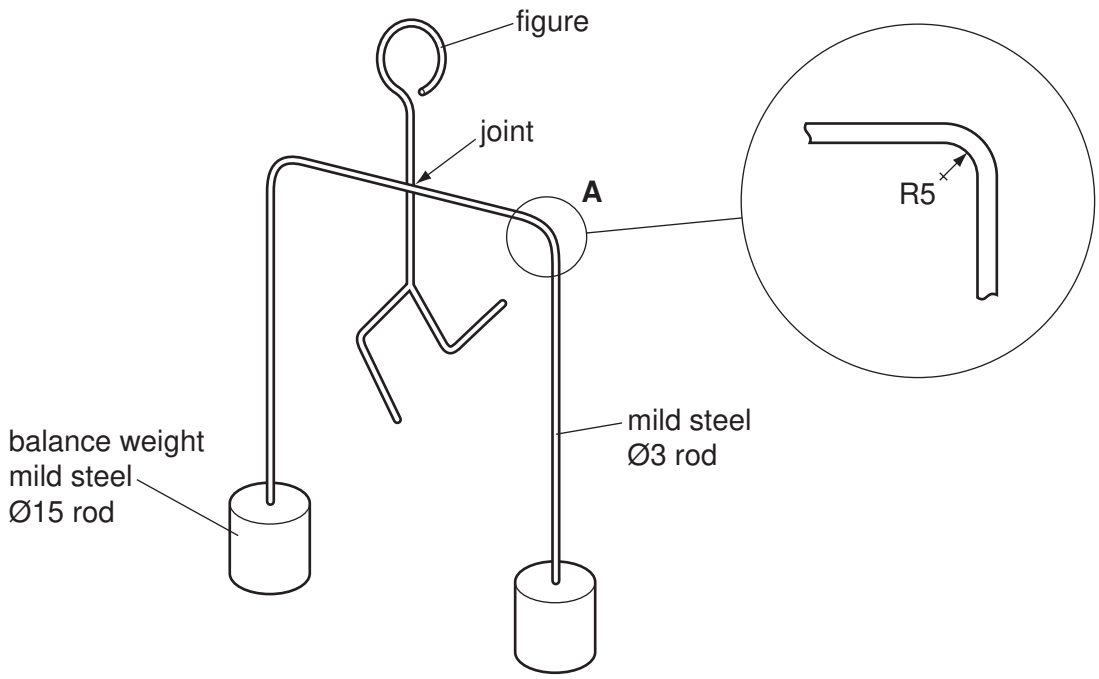

Fig. 12

(a) Use sketches and notes to show how bend **A** can be produced on the Ø3 mild steel rod.

[4]

(b) Both ends of the balance weights are to be faced on a centre lathe.

Complete Fig. 13 to show a lathe tool correctly positioned for facing.

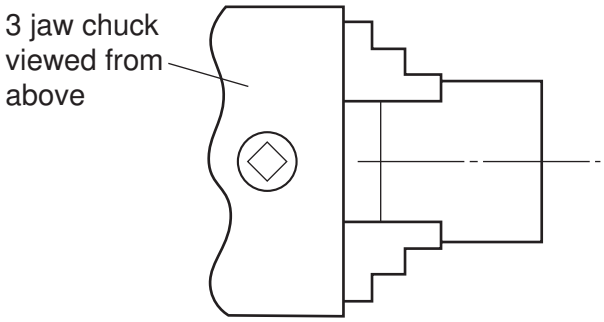

Fig. 13

[2]

(c) After facing the ends of the balance weights, the centre must be located.

(i) Name the drill used to prepare the metal before drilling the Ø3 hole.

..... [1]

(ii) Complete Fig. 14 to show this drill in position, ready to drill.

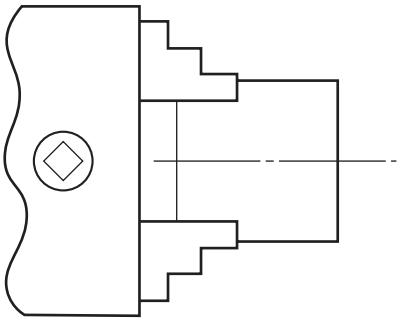

Fig. 14

[2]

(d) Name the lathe tool used to cut the balance weights to length while on the lathe.

..... [1]

(e) An alternative method of producing the balance weights would be to saw them length of steel rod.

Use sketches and notes to show how **one** balance weight could be marked out then sawn to length.

Name **two** marking out tools and the name of the saw used.

[5]

(f) The joint in Fig. 12 will be made by brazing.

Use sketches and notes to show how the figure would be brazed to the Ø3 mild steel rod.

Include details of preparation before brazing.

[6]

(g) An epoxy resin adhesive could be used to join the balance weights to the mi
rod.

Use sketches and notes to show how the epoxy resin adhesive would be prepared and
how the balance weights are held securely while the adhesive sets.

[4]

13 Fig. 15 shows a storage box for small items.

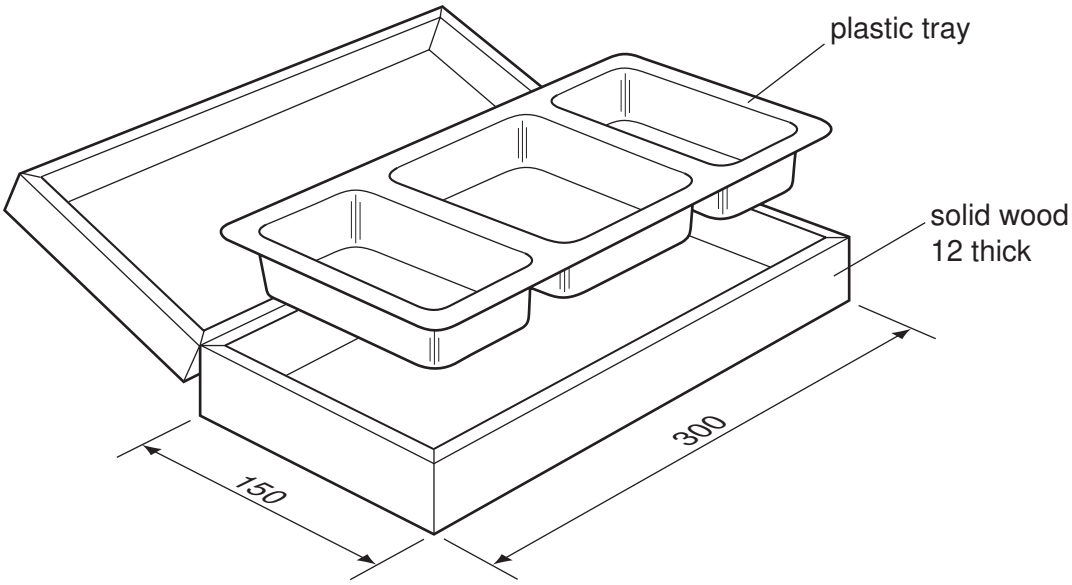

Fig. 15

(a) State **three** considerations a designer would include in a design specification for the storage box.

1 ..... [1]

2 ..... [1]

3 ..... [1]

(b) The plastic tray will be produced by means of vacuum forming.

Name a suitable plastic for the tray.

..... [1]

(c) Give **two** reasons why a manufactured board is more suitable than solid wood for the former used to vacuum form the plastic tray.

1 ..... [1]

2 ..... [1]

(d) Fig. 16 shows three blocks made from manufactured board used as the former
plastic tray.

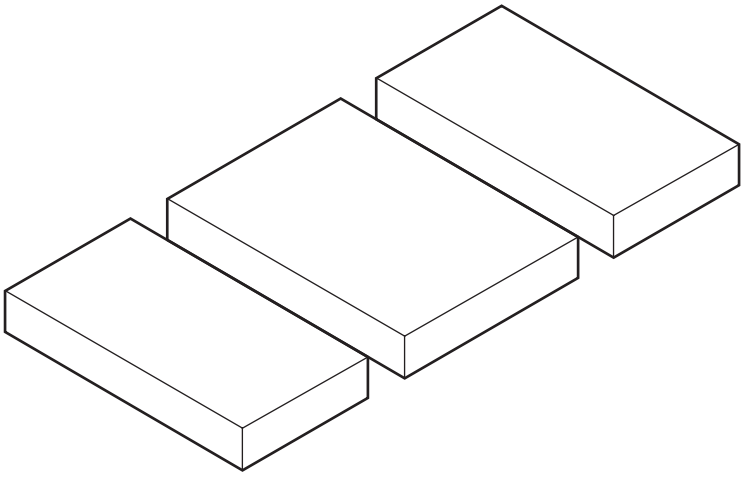

Fig. 16

(i) Describe what needs to be done to the blocks to ensure that the plastic tray can be released from the former when vacuum formed.

.....

.....

..... [2]

(ii) State **two** stages in the process of vacuum forming the plastic tray.

1 ..... [1]

2 ..... [1]

(e)

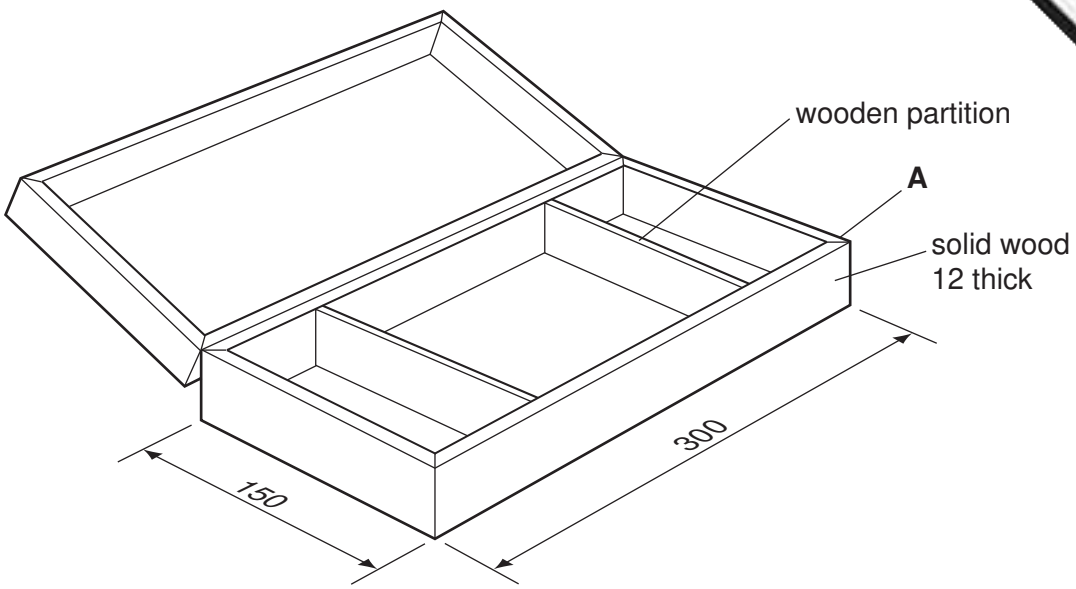

Fig. 17

(i) Give **two** advantages of using a plastic tray rather than the separate wooden partitions shown in Fig. 17.

1 ..... [1]

2 ..... [1]

(ii) Give **one** advantage of using separate wooden partitions rather than a plastic tray.

..... [1]

(f) The joint at corner **A** in Fig. 17 is a mitre joint.

Use sketches and notes to show how the mitre joint could be:

(i) marked out;

(ii) cut to 45°.

[4]

(g) Use sketches and notes to show how a 4 mm thick manufactured board base c
fitted to the box. The edges of the base must not be seen.

[4]

(h) Sketch and name a suitable catch that could be used to secure the lid of the box when closed.

[4]

BLANK PAGE

BLANK PAGE

BLANK PAGE